# Lab 5
# Combination Circuits

Digital System Fundamentals

Sorayut Glomglome

# Learning Outcomes

1. Use encoder/decoder to implement BCD Adder.
2. Implement basic ALU.

# 1. BCD Adder

# BCD Adder | Top Level

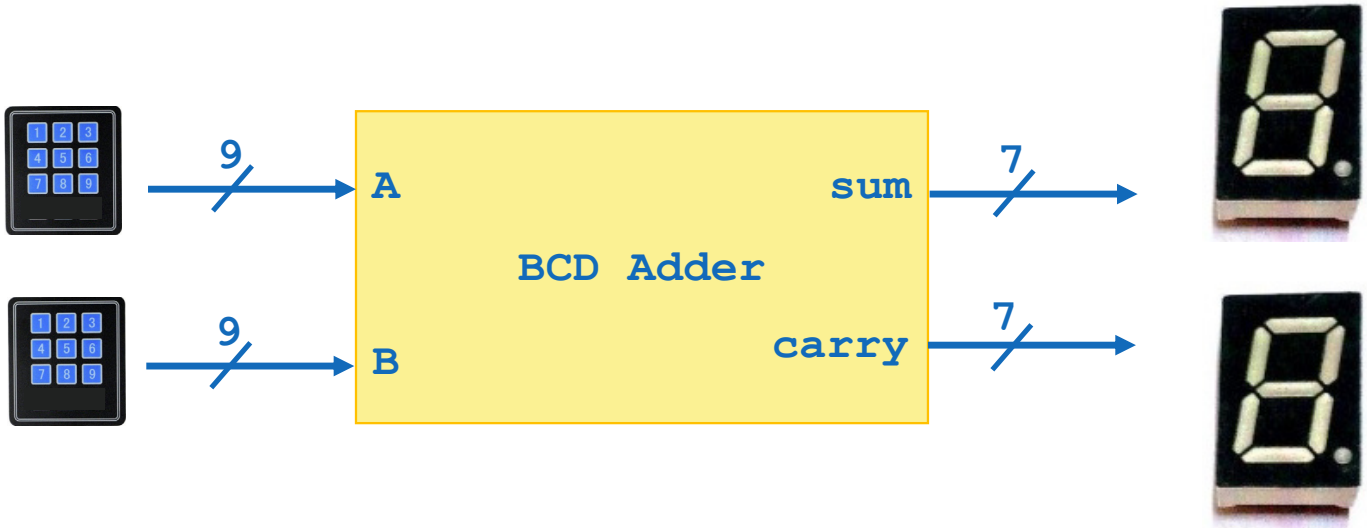

# BCD Adder | Second Level

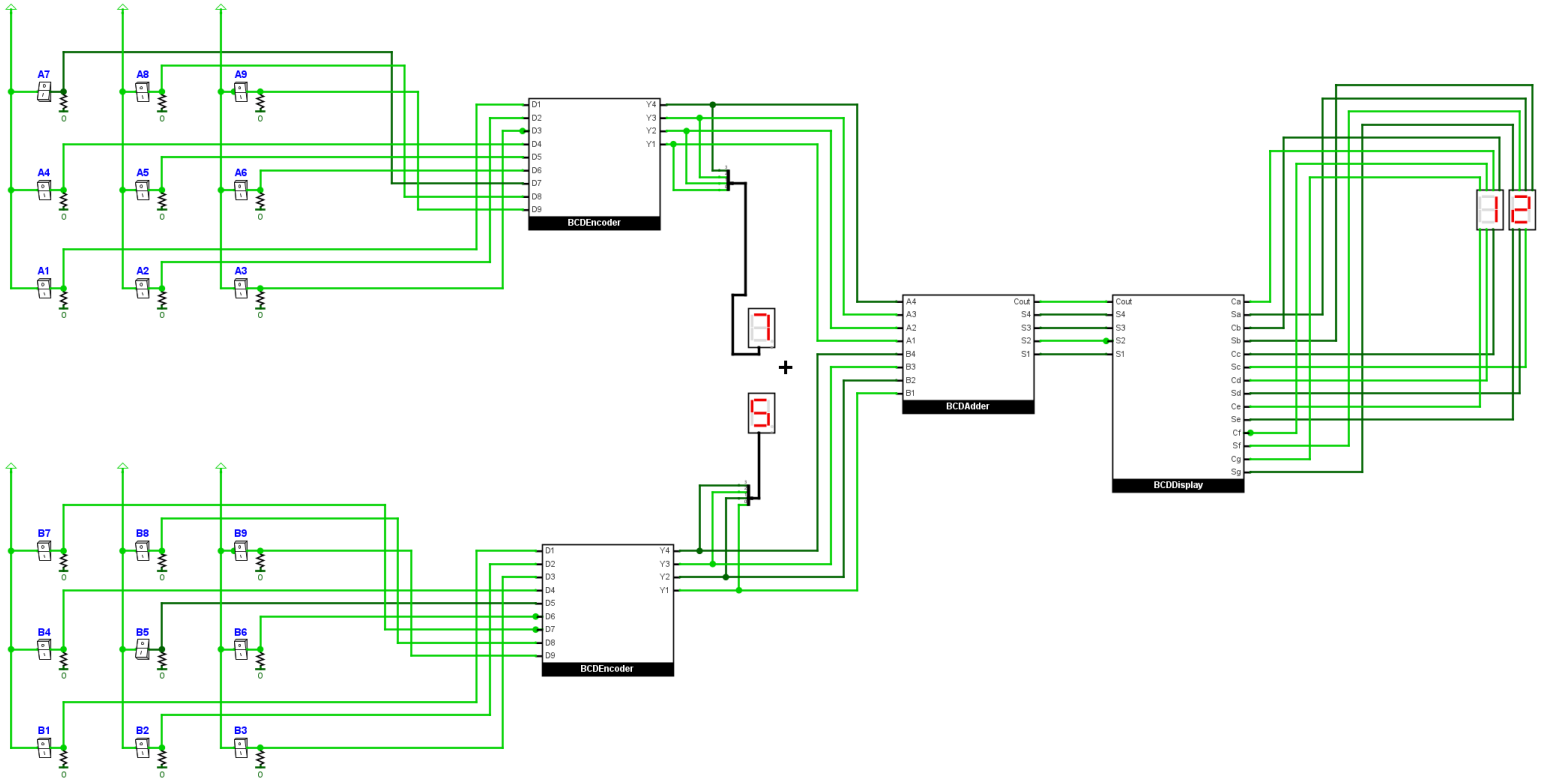

# 1.1 BCDEncoder Module

1. Create .csv file for the modified 74147-function table.
2. Build the subcircuit in Logisim by import truth table from .csv file.

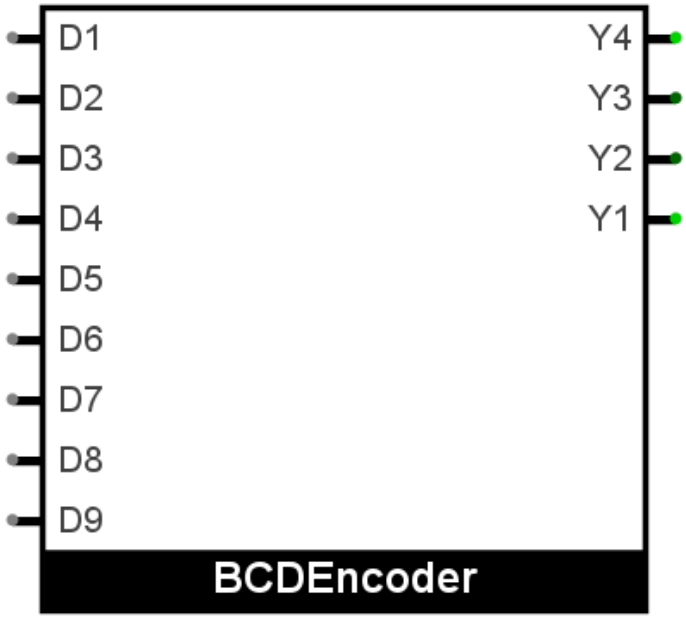

# 1.1 BCDEncoder Module | 74147

## 74147 | 10-LINE-TO-4-LINE PRIORITY ENCODERS

**SN54/74LS147**
(TOP VIEW)

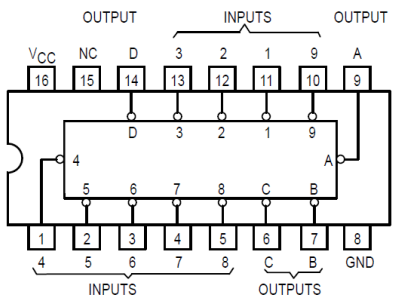


**SN54/74LS147**
**FUNCTION TABLE**

| INPUTS | | | | | | | | | OUTPUTS | | | |
|---|---|---|---|---|---|---|---|---|---|---|---|---|
| 1 | 2 | 3 | 4 | 5 | 6 | 7 | 8 | 9 | D | C | B | A |
| H | H | H | H | H | H | H | H | H | H | H | H | H |
| X | X | X | X | X | X | X | X | L | L | H | H | L |
| X | X | X | X | X | X | X | L | H | L | H | H | H |
| X | X | X | X | X | X | L | H | H | H | L | L | L |
| X | X | X | X | X | L | H | H | H | H | L | L | H |
| X | X | X | X | L | H | H | H | H | H | L | H | L |
| X | X | X | L | H | H | H | H | H | H | L | H | H |
| X | X | L | H | H | H | H | H | H | H | H | L | L |
| X | L | H | H | H | H | H | H | H | H | H | L | H |
| L | H | H | H | H | H | H | H | H | H | H | H | L |

H = HIGH Logic Level, L = LOW Logic Level, X = Irrelevant

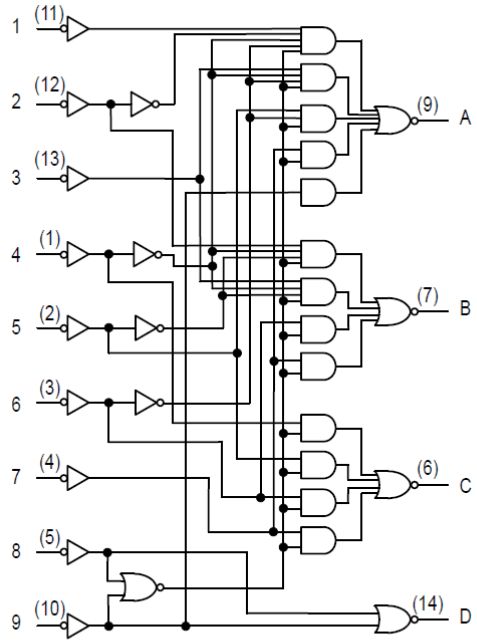


**SN54/74LS147**

# 1.1 BCDEncoder Module | .csv File

**SN54/74LS147**
**FUNCTION TABLE**

| INPUTS | | | | | | | | | OUTPUTS | | | |
|---|---|---|---|---|---|---|---|---|---|---|---|---|
| 1 | 2 | 3 | 4 | 5 | 6 | 7 | 8 | 9 | D | C | B | A |
| H | H | H | H | H | H | H | H | H | H | H | H | H |
| X | X | X | X | X | X | X | X | L | L | H | H | L |
| X | X | X | X | X | X | X | L | H | L | H | H | H |
| X | X | X | X | X | X | L | H | H | H | L | L | L |
| X | X | X | X | X | L | H | H | H | H | L | L | H |
| X | X | X | X | L | H | H | H | H | H | L | H | L |
| X | X | X | L | H | H | H | H | H | H | L | H | H |
| X | X | L | H | H | H | H | H | H | H | H | L | L |
| X | L | H | H | H | H | H | H | H | H | H | L | H |
| L | H | H | H | H | H | H | H | H | H | H | H | L |

H = HIGH Logic Level, L = LOW Logic Level, X = Irrelevant

```
D1,D2,D3,D4,D5,D6,D7,D8,D9,|,Y4,Y3,Y2,Y1
1,1,1,1,1,1,1,1,1,|,0,0,0,0
-,-,-,-,-,-,-,-,0,|,1,0,0,1
-,-,-,-,-,-,-,0,1,|,1,0,0,0
-,-,-,-,-,-,0,1,1,|,0,1,1,1
-,-,-,-,-,0,1,1,1,|,0,1,1,0
-,-,-,-,0,1,1,1,1,|,0,1,0,1
-,-,-,0,1,1,1,1,1,|,0,1,0,0
-,-,0,1,1,1,1,1,1,|,0,0,1,1
-,0,1,1,1,1,1,1,1,|,0,0,1,0
0,1,1,1,1,1,1,1,1,|,0,0,0,1
```

| | A | B | C | D | E | F | G | H | I | J | K | L | M | N |
|---|---|---|---|---|---|---|---|---|---|---|---|---|---|---|
| 1 | D1 | D2 | D3 | D4 | D5 | D6 | D7 | D8 | D9 | \| | Y4 | Y3 | Y2 | Y1 |
| 2 | 1 | 1 | 1 | 1 | 1 | 1 | 1 | 1 | 1 | \| | 0 | 0 | 0 | 0 |
| 3 | - | - | - | - | - | - | - | - | 0 | \| | 1 | 0 | 0 | 1 |
| 4 | - | - | - | - | - | - | - | 0 | 1 | \| | 1 | 0 | 0 | 0 |
| 5 | - | - | - | - | - | - | 0 | 1 | 1 | \| | 0 | 1 | 1 | 1 |
| 6 | - | - | - | - | - | 0 | 1 | 1 | 1 | \| | 0 | 1 | 1 | 0 |
| 7 | - | - | - | - | 0 | 1 | 1 | 1 | 1 | \| | 0 | 1 | 0 | 1 |
| 8 | - | - | - | 0 | 1 | 1 | 1 | 1 | 1 | \| | 0 | 1 | 0 | 0 |
| 9 | - | - | 0 | 1 | 1 | 1 | 1 | 1 | 1 | \| | 0 | 0 | 1 | 1 |
| 10 | - | 0 | 1 | 1 | 1 | 1 | 1 | 1 | 1 | \| | 0 | 0 | 1 | 0 |
| 11 | 0 | 1 | 1 | 1 | 1 | 1 | 1 | 1 | 1 | \| | 0 | 0 | 0 | 1 |

# 1.1 BCDEncoder Module | Implementation

- Menu Project -> Analyze Circuit.
- Import Table
- Select the created .csv file
- Optimize minterms
- Build Circuit
- Verify Circuit

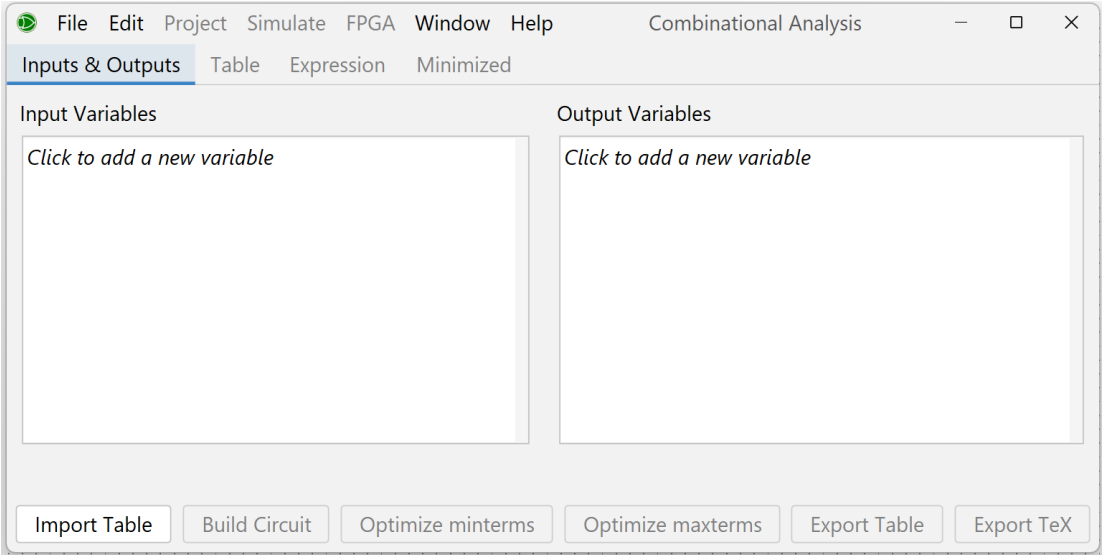

# 1.1 BCDEncoder Module | Keypad

- **Switch** component under **Input/Output Extra**.
- **Power** component under **Wiring**.
- **Pull Resistor** component under **Wiring**.
  - Set **Pull Direction** attribute to **Zero**.

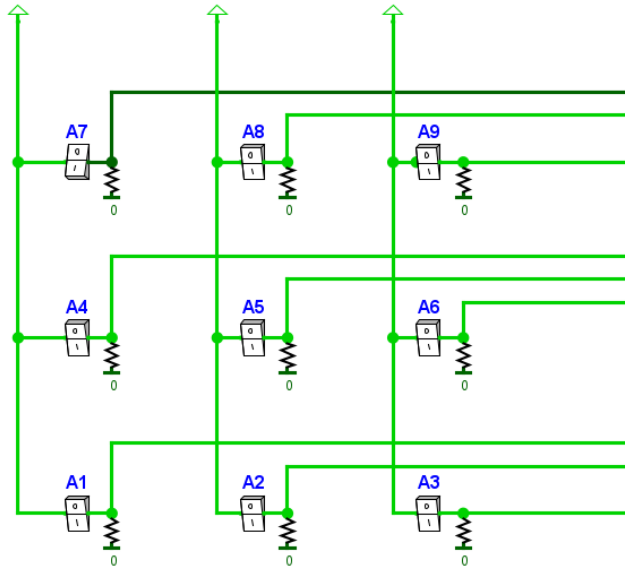

# 1.2 BCDAdder Module

1. Use 2 binary adder ICs.
2. Detect and adjust the summation.

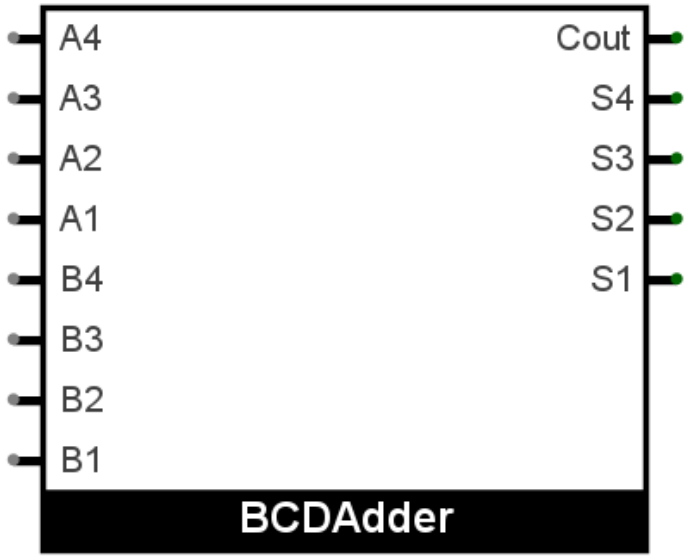

# 1.2 BCDAdder Module | 74283 Datasheet

- Use IC **74283** under **TTL**.

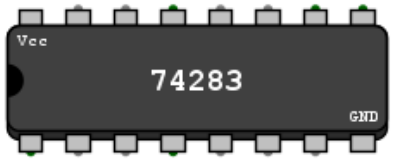


**SN54F283 . . . J PACKAGE**
**SN74F283 . . . D OR N PACKAGE**
**(TOP VIEW)**

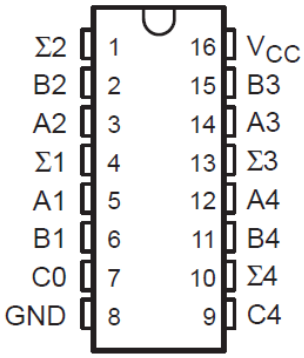


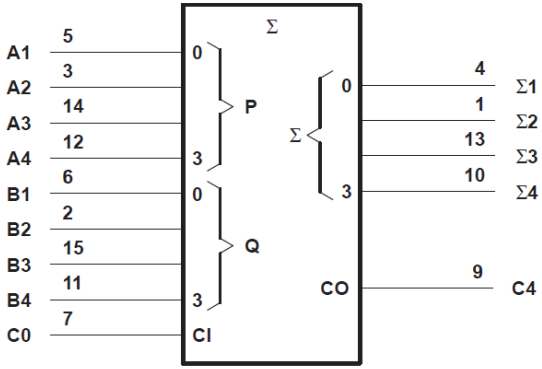


FUNCTION TABLE

| INPUTS | | | | OUTPUTS | | | | | |
|---|---|---|---|---|---|---|---|---|---|
| | | | | WHEN C0 = L | | | WHEN C0 = H | | |
| | | | | WHEN C2 = L | | | WHEN C2 = H | | |
| A1 | B1 | A2 | B2 | Σ1 | Σ2 | C2 | Σ1 | Σ2 | C2 |
| A3 | B3 | A4 | B4 | Σ3 | Σ4 | C4 | Σ3 | Σ4 | C4 |
| L | L | L | L | L | L | L | H | L | L |
| H | L | L | L | H | L | L | L | H | L |
| L | H | L | L | H | L | L | L | H | L |
| H | H | L | L | L | H | L | H | H | L |
| L | L | H | L | L | H | L | H | H | L |
| H | L | H | L | H | H | L | L | L | H |
| L | H | H | L | H | H | L | L | L | H |
| H | H | H | L | L | L | H | H | L | H |
| L | L | L | H | L | H | L | H | H | L |
| H | L | L | H | H | H | L | L | L | H |
| L | H | L | H | H | H | L | L | L | H |
| H | H | L | H | L | L | H | H | L | H |
| L | L | H | H | L | L | H | H | L | H |
| H | L | H | H | H | L | H | L | H | H |
| L | H | H | H | H | L | H | L | H | H |
| H | H | H | H | L | H | H | H | H | H |

NOTE: Input conditions at A1, B1, A2, B2, and C0 are used to determine outputs Σ1 and Σ2 and the value of the internal carry C2. The values at C2, A3, B3, A4, and B4 are then used to determine outputs Σ3, Σ4, and C4.

# 1.2 BCDAdder Module | Build & Adjust

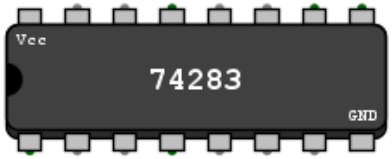


| Case | Detail | Determine Operand $B_3\ B_2\ B_1\ B_0$ | Action |
|---|---|---|---|
| 1 | Sum <= 9 & Carry = 0 | 0 0 0 0 | No Adjusting |
| 2 | Sum > 9 & Carry = 0 | 0 1 1 0 | +6 |
| 3 | Sum <= 9 & Carry = 1 | 0 1 1 0 | +6 |

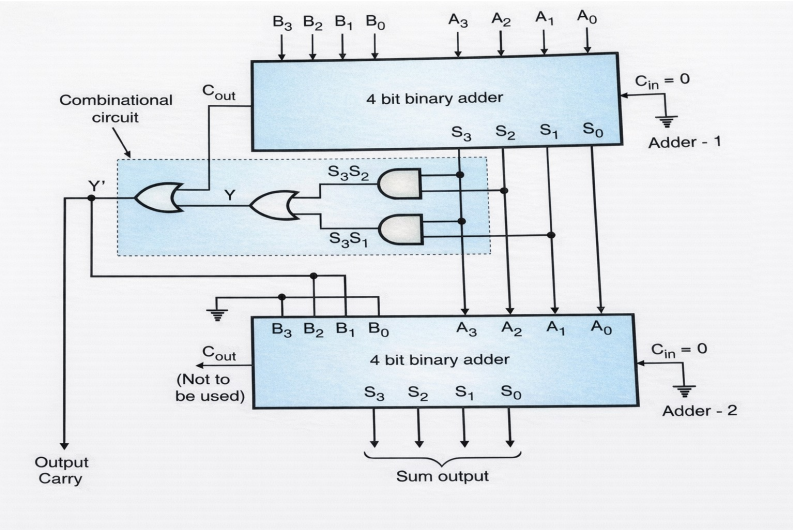


| $S_3$ | $S_2$ | $S_1$ | $S_0$ | Decimal | BCD | $S_3S_2$ | $S_3S_1$ | $S_3S_2 + S_3S_1$ |
|---|---|---|---|---|---|---|---|---|
| 0 | 0 | 0 | 0 | 0 | 0 | 00 | 00 | 0 |
| 0 | 0 | 0 | 1 | 1 | 1 | 00 | 00 | 0 |
| 0 | 0 | 1 | 0 | 2 | 2 | 00 | 01 | 0 |
| 0 | 0 | 1 | 1 | 3 | 3 | 00 | 01 | 0 |
| 0 | 1 | 0 | 0 | 4 | 4 | 01 | 00 | 0 |
| 0 | 1 | 0 | 1 | 5 | 5 | 01 | 00 | 0 |
| 0 | 1 | 1 | 0 | 6 | 6 | 01 | 01 | 0 |
| 0 | 1 | 1 | 1 | 7 | 7 | 01 | 01 | 0 |
| 1 | 0 | 0 | 0 | 8 | 8 | 10 | 10 | 0 |
| 1 | 0 | 0 | 1 | 9 | 9 | 10 | 10 | 0 |
| 1 | 0 | 1 | 0 | 10 | - | 10 | 11 | 1 |
| 1 | 0 | 1 | 1 | 11 | - | 10 | 11 | 1 |
| 1 | 1 | 0 | 0 | 12 | - | 11 | 10 | 1 |
| 1 | 1 | 0 | 1 | 13 | - | 11 | 10 | 1 |
| 1 | 1 | 1 | 0 | 14 | - | 11 | 11 | 1 |
| 1 | 1 | 1 | 1 | 15 | - | 11 | 11 | 1 |

# 1.3 BCDDisplay

- Use 2 BCD-to-7SEG ICs.

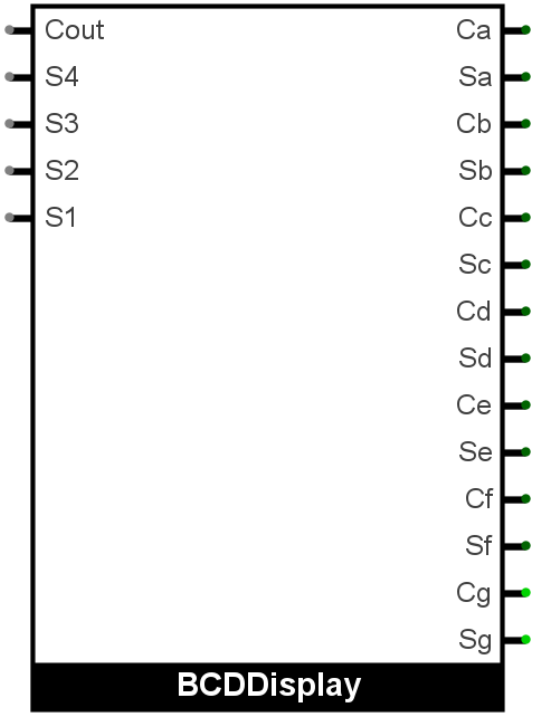

# 1.3 BCDDisplay Module | 7447 Datasheet

- Use IC **7447** under **TTL**.

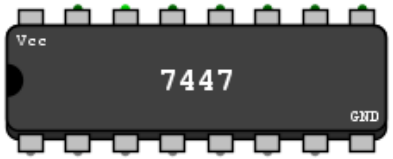


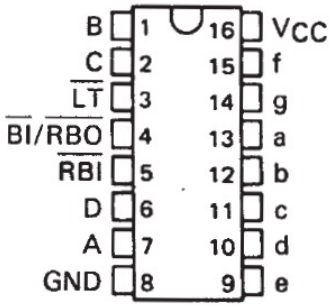


logic symbols†

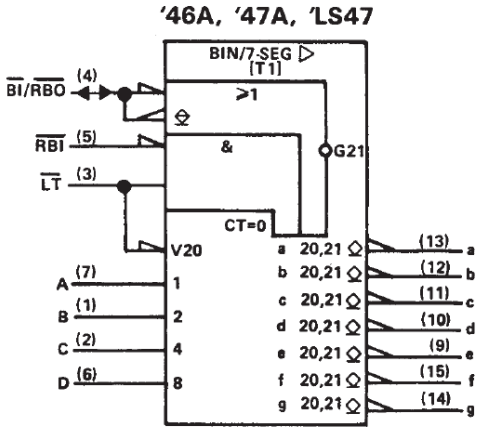

SEGMENT IDENTIFICATION

NUMERICAL DESIGNATIONS AND RESULTANT DISPLAYS

'46A, '47A, 'LS47 FUNCTION TABLE (T1)

| DECIMAL OR FUNCTION | INPUTS | | | | | | BI/RBO† | OUTPUTS | | | | | | | NOTE |
|---|---|---|---|---|---|---|---|---|---|---|---|---|---|---|---|
| | LT | RBI | D | C | B | A | | a | b | c | d | e | f | g | |
| 0 | H | H | L | L | L | L | H | ON | ON | ON | ON | ON | ON | OFF | |
| 1 | H | X | L | L | L | H | H | OFF | ON | ON | OFF | OFF | OFF | OFF | |
| 2 | H | X | L | L | H | L | H | ON | ON | OFF | ON | ON | OFF | ON | |
| 3 | H | X | L | L | H | H | H | ON | ON | ON | ON | OFF | OFF | ON | |
| 4 | H | X | L | H | L | L | H | OFF | ON | ON | OFF | OFF | ON | ON | |
| 5 | H | X | L | H | L | H | H | ON | OFF | ON | ON | OFF | ON | ON | |
| 6 | H | X | L | H | H | L | H | OFF | OFF | ON | ON | ON | ON | ON | |
| 7 | H | X | L | H | H | H | H | ON | ON | ON | OFF | OFF | OFF | OFF | 1 |
| 8 | H | X | H | L | L | L | H | ON | ON | ON | ON | ON | ON | ON | |
| 9 | H | X | H | L | L | H | H | ON | ON | ON | OFF | OFF | ON | ON | |
| 10 | H | X | H | L | H | L | H | OFF | OFF | OFF | ON | ON | OFF | ON | |
| 11 | H | X | H | L | H | H | H | OFF | OFF | ON | ON | OFF | OFF | ON | |
| 12 | H | X | H | H | L | L | H | OFF | ON | OFF | OFF | OFF | ON | ON | |
| 13 | H | X | H | H | L | H | H | ON | OFF | OFF | ON | OFF | ON | ON | |
| 14 | H | X | H | H | H | L | H | OFF | OFF | OFF | ON | ON | ON | ON | |
| 15 | H | X | H | H | H | H | H | OFF | OFF | OFF | OFF | OFF | OFF | OFF | |
| BI | X | X | X | X | X | X | L | OFF | OFF | OFF | OFF | OFF | OFF | OFF | 2 |
| RBI | H | L | L | L | L | L | L | OFF | OFF | OFF | OFF | OFF | OFF | OFF | 3 |
| LT | L | X | X | X | X | X | H | ON | ON | ON | ON | ON | ON | ON | 4 |

# 1.3 BCDDisplay Module | Active Low 7SEG

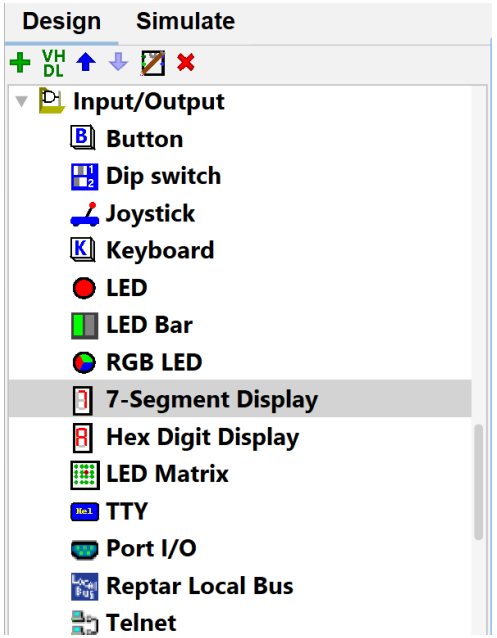


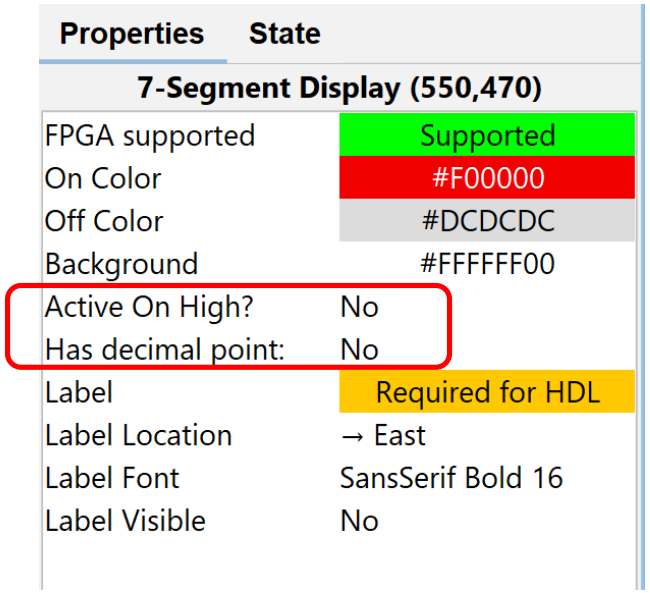


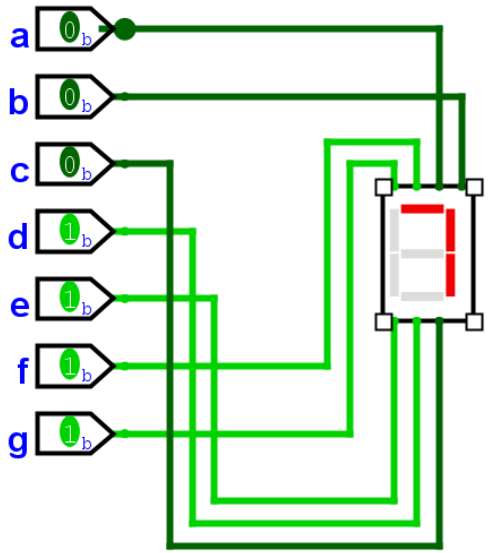

# Checkpoint 1 (15 pts)

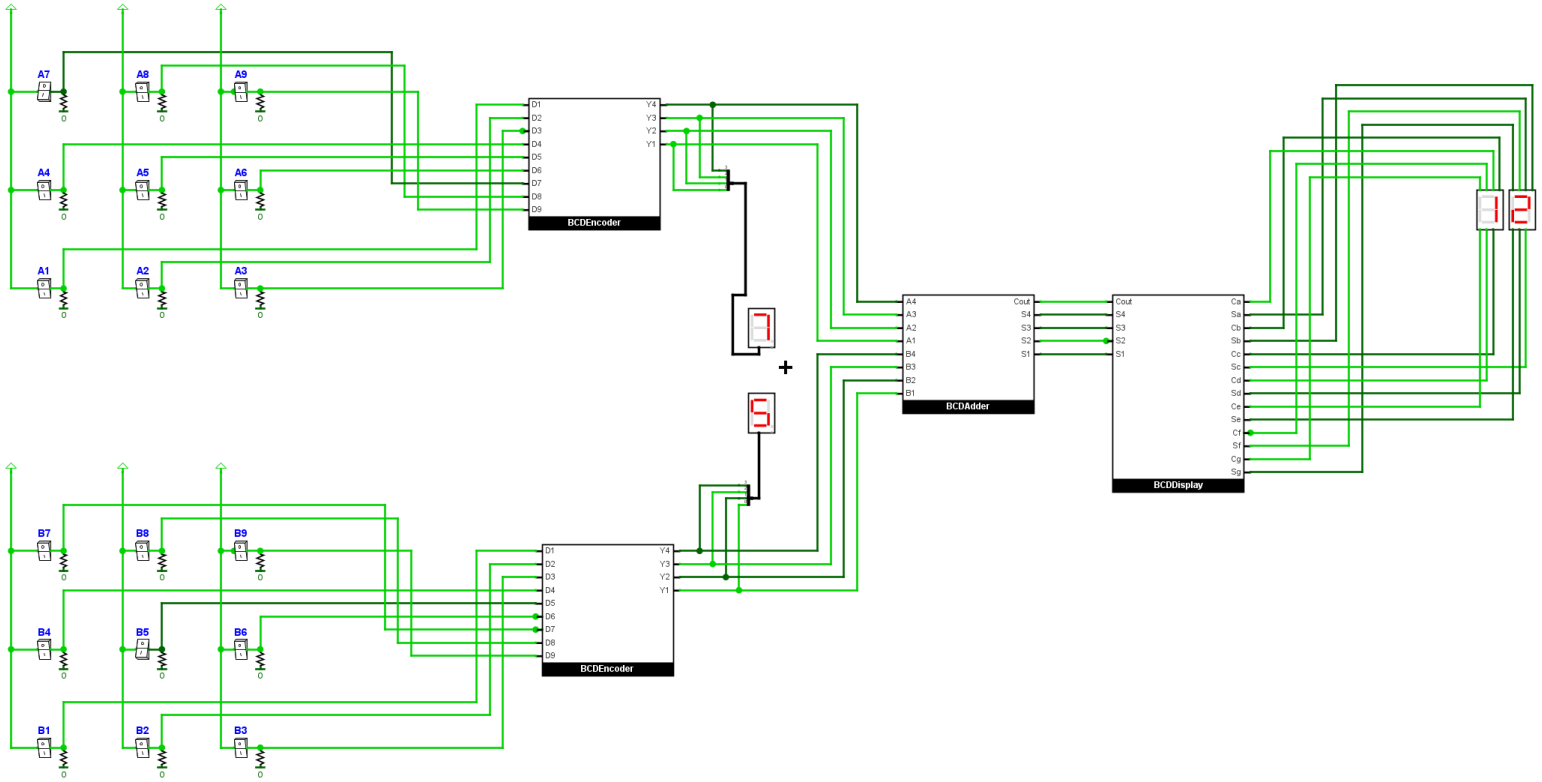

# 2. Basic ALU

Arithmetic Logic Unit

# 2.1 1-Bit ALU

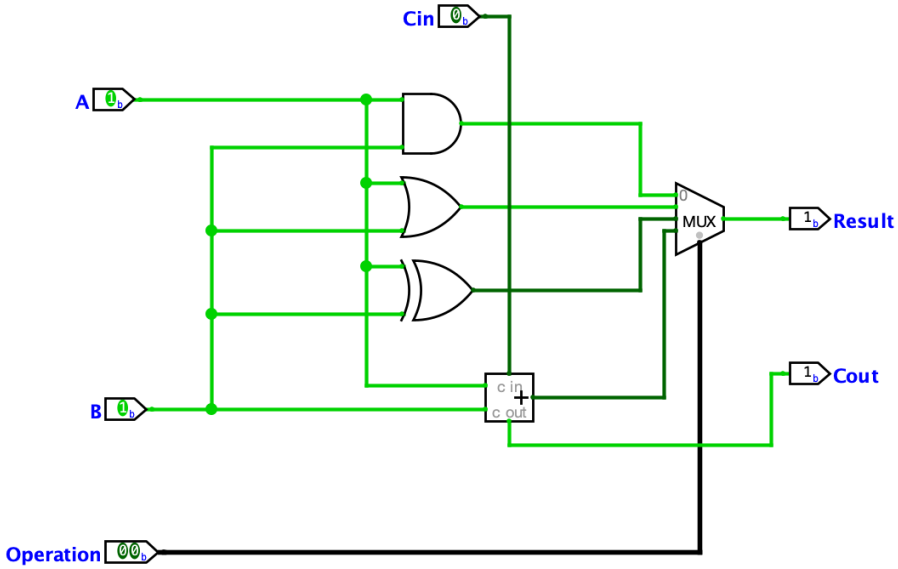


| Operation | Result |
|---|---|
| 00 | AND |
| 01 | OR |
| 10 | XOR |
| 11 | Addition |

# 2.1 1-Bit ALU

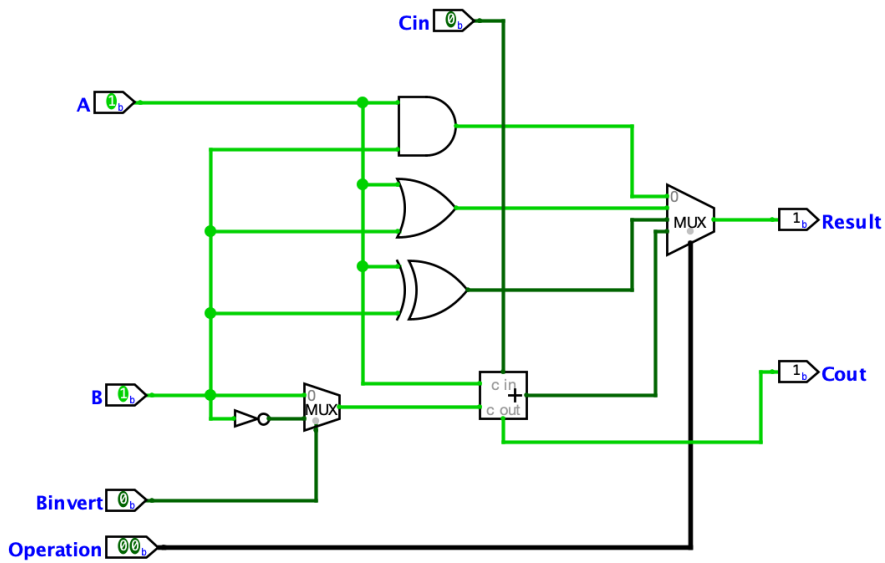


| Binvert | Operation | Result |
|---|---|---|
| 0 | 00 | AND |
| 0 | 01 | OR |
| 0 | 10 | XOR |
| 0 | 11 | Addition |
| 1 | 11 | Subtraction |

# 2.1 1 Bit ALU | MUX

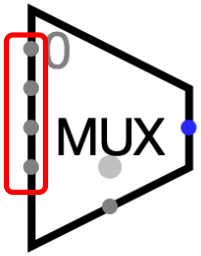


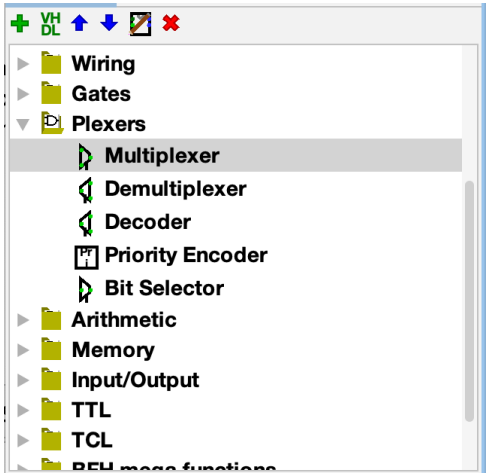


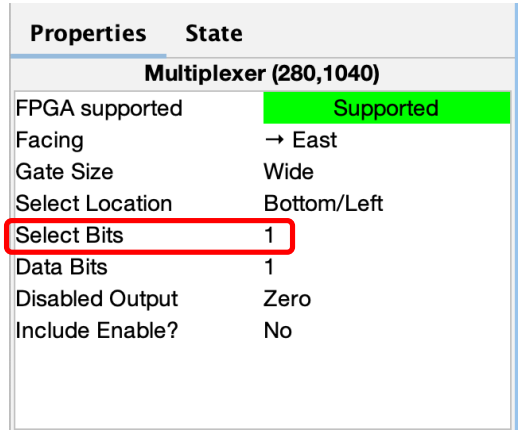


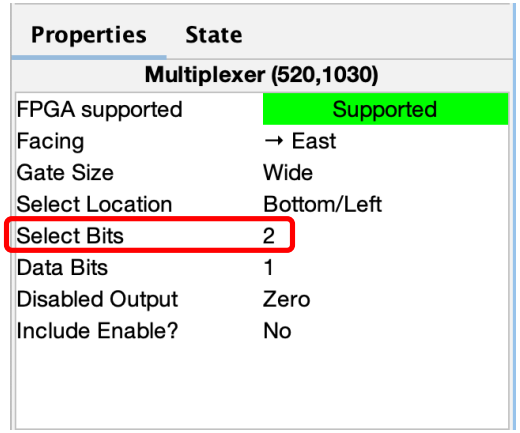

# 2.1 1-Bit ALU | Adder

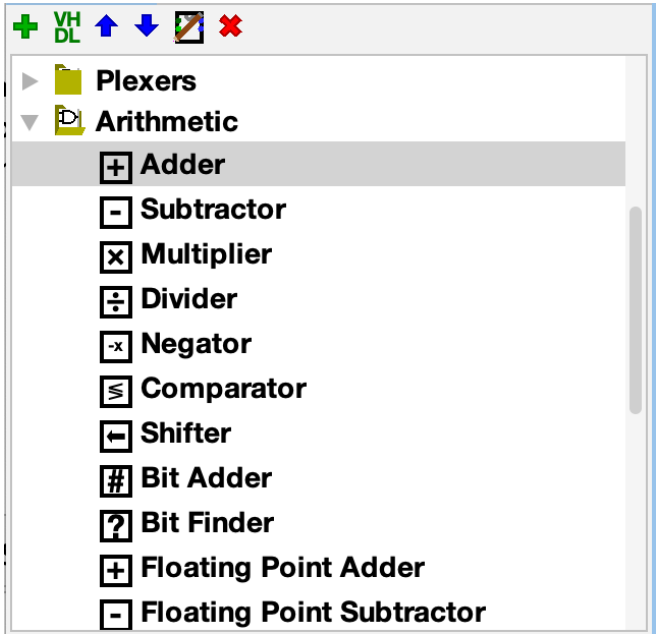


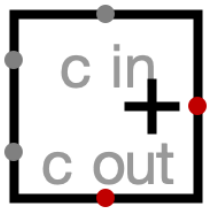


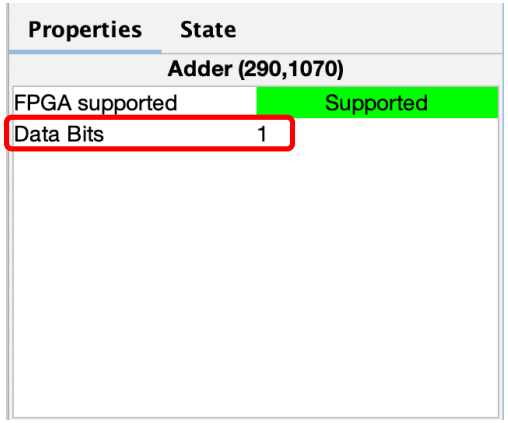

# 2.1 1-Bit ALU | Input Port

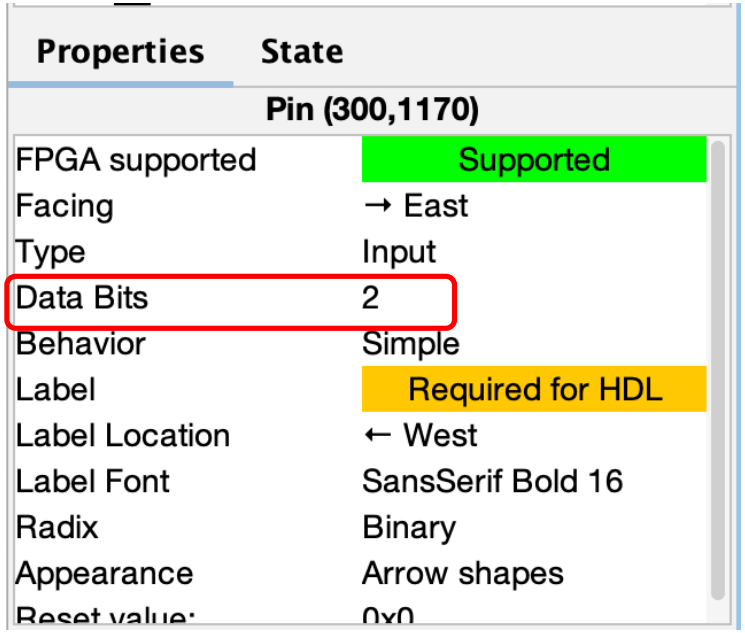


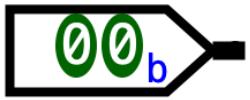

# 2.2 4-Bit ALU

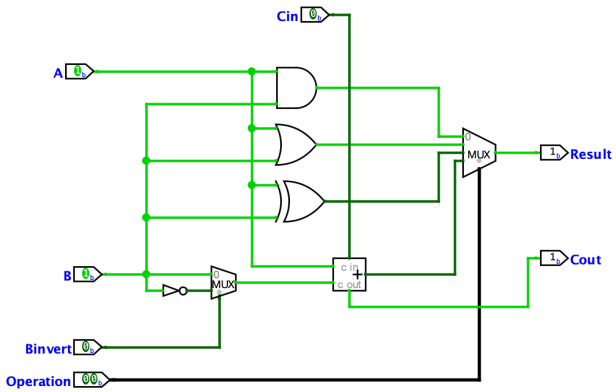
Cin
A
B
Binvert
Operation
MUX
MUX
Result
Cout

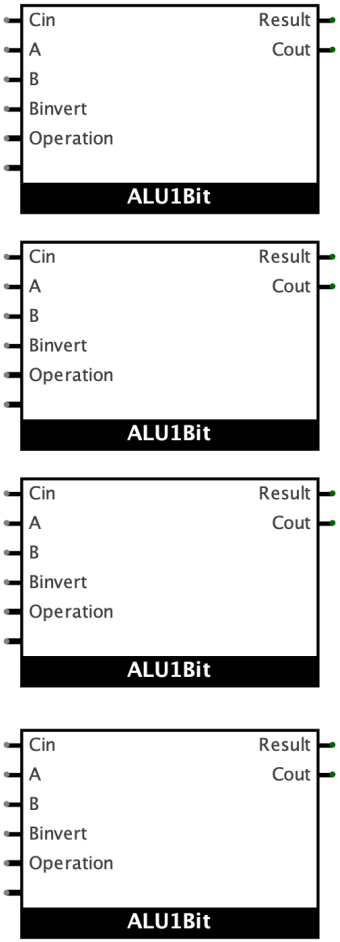
Cin
A
B
Binvert
Operation
Result
Cout
ALU1Bit
Cin
A
B
Binvert
Operation
Result
Cout
ALU1Bit
Cin
A
B
Binvert
Operation
Result
Cout
ALU1Bit
Cin
A
B
Binvert
Operation
Result
Cout
ALU1Bit

# 2.3 8-Bit ALU | Checkpoint 2 (10 pts)

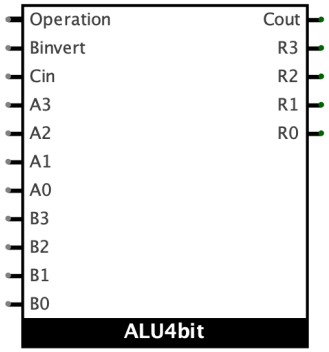


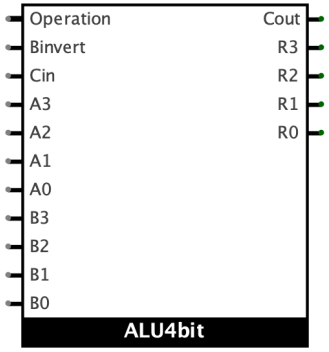

# Lab 5 Submission

Date _____ Group No. _____

1. Student ID _____ Name _____

2. Student ID _____ Name _____

3. Student ID _____ Name _____

## Questions

1. If **`Ainvert`** control signal has been added to 1-bit ALU as shown in the following figure, determine the results according to provided control signals and prove using Boolean algebra or truth table.

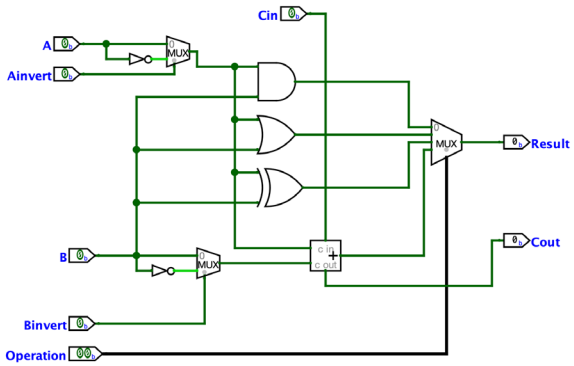


| **`Ainvert`** | **`Binvert`** | Operation | Result | Prove |
|---|---|---|---|---|
| 1 | 1 | 00 | | |
| 1 | 1 | 01 | | |

# THANK YOU